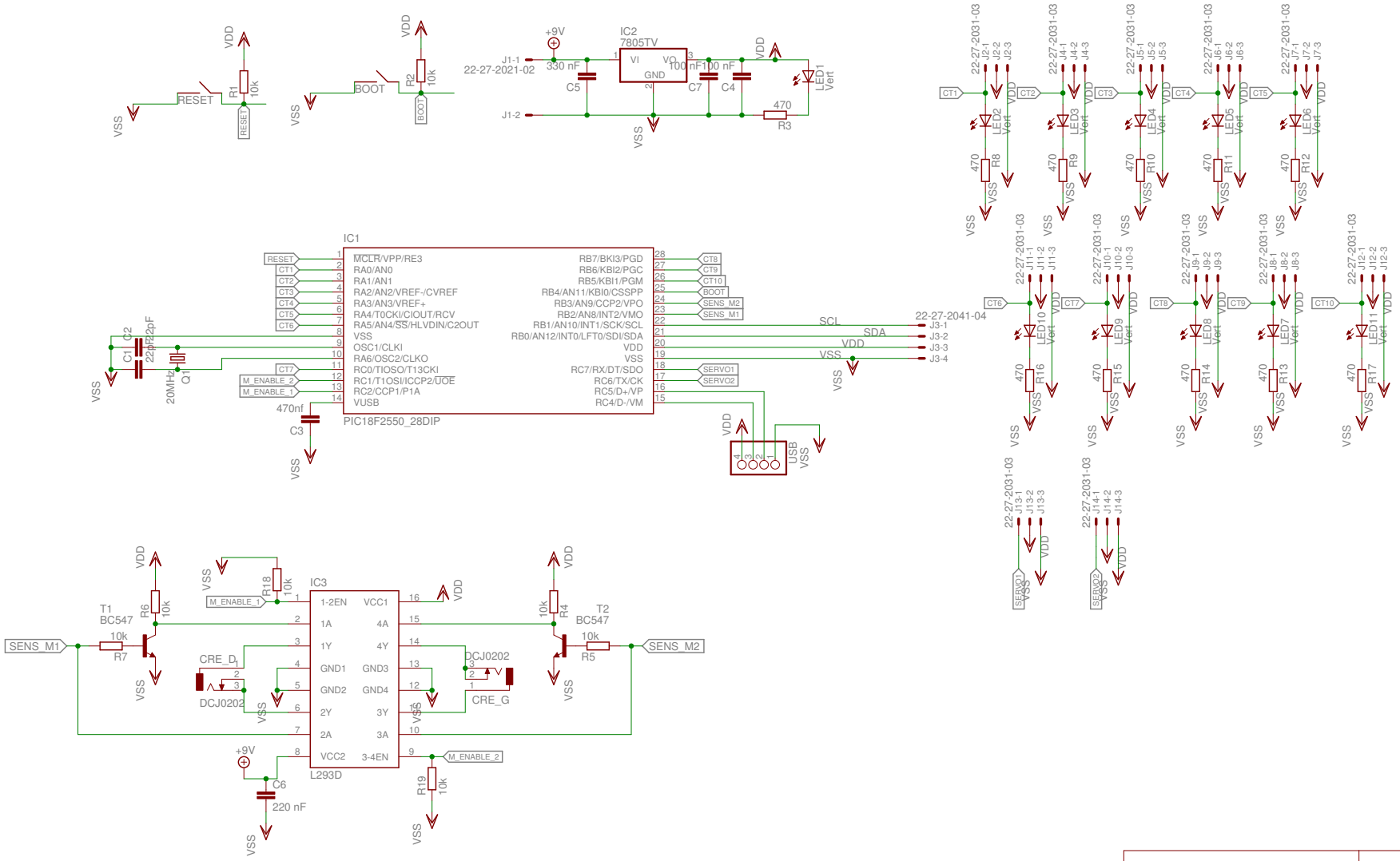

Robot_2012_Cre

14/01/12 23:07

Sheet: 1/1